PELLA CORPORATION
102 MAIN STREET
PELLA, IA 50219
641-621-1000

ARCHITECT SERIES CLAD IMPACT TRADITIONAL SLIDING GLASS DOOR

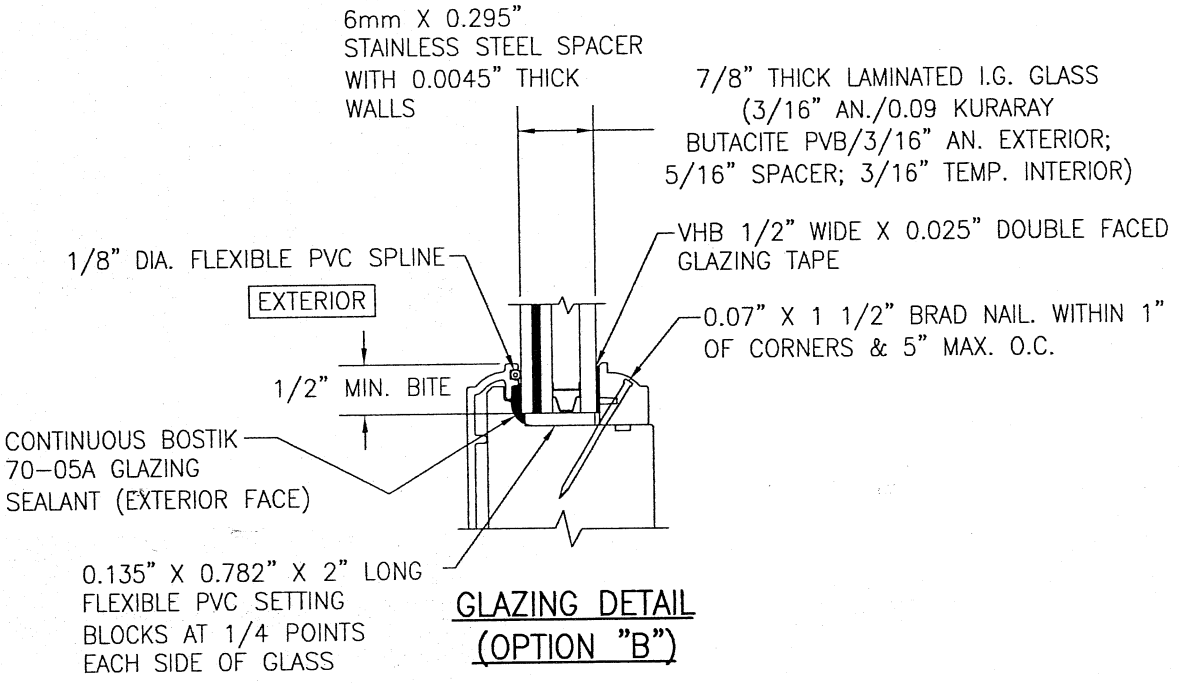

GLAZING DETAIL
(OPTION "B")